Effective

REVISIONS				
INIT.	REV.	ZONE	DESCRIPTION	DATE
KW	1	N/A	INITIATED PER 1608004; QUALIFY NEW LINE OF DIALYZERS IN THE US MARKET; DWG-MD-2025256	9.15.2017

SIZE: 11.7 X 8.5 (APPROX.)

MATERIAL: WHITE PAPER STOCK

PRINT: BLACK

NOTES:
1. VENDOR CREATED ARTWORK
2. SEE ATTACHED SHEETS FOR ARTWORK

DRAWN	KW	9.15.2017
CHECKED		
ENG APPR.		
QA APPR.		
	INITIAL	DATE

UNLESS OTHERWISE SPECIFIED:
DIMENSIONS ARE IN INCHES
TOLERANCES:
FRACTIONAL: ±1/16
ANGULAR: ±1/2°
TWO PLACE DECIMAL: ±.06
THREE PLACE DECIMAL: ±.062

B|BRAUN

B. Braun Medical Inc.
Bethlehem, PA 18018

PRODUCT CODE: N/A

TITLE: INSTRUCTIONS FOR USE (PFG); DIACAP PRO DIALYZER; AVITUM

SIZE:	DWG. NO.:	REV:
A	P-8668(s)	1

SCALE: 1:1 | SHEETS: 1 OF 1

CAUTION: This drawing is the property of B. Braun Medical Inc. Information hereon is CONFIDENTIAL.
Unauthorized use is prohibited.

Diacap® Pro

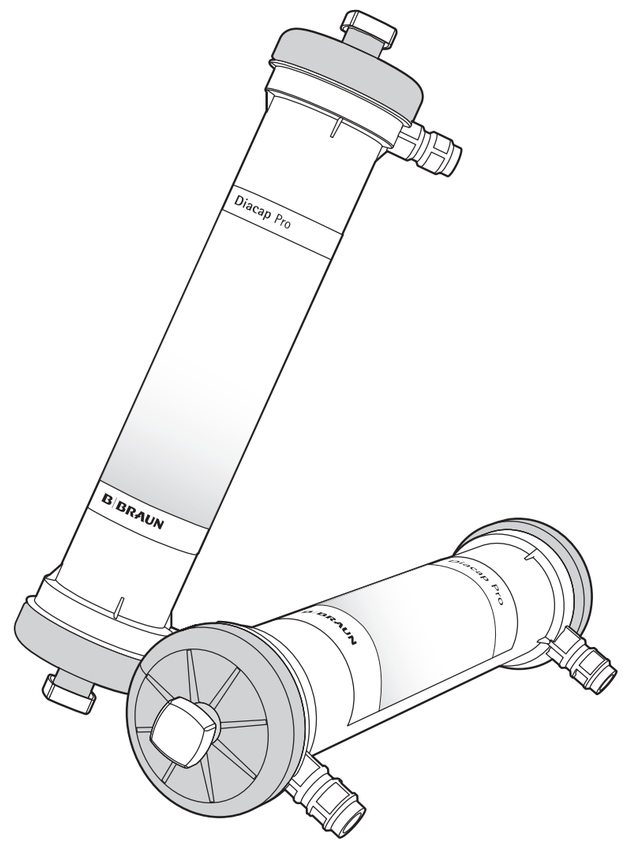

B. Braun Avitum AG
34209 Melsungen
Germany

Diacap® Pro

	0°C–30°C	STERILE R					LOT	REF			UF Control		600 TMP
GB	Storage temperature between 0°C ... 30°C	Gamma sterilisation, sterile blood and dialysate pathway	Single use only	Caution	Do not use if packaging is damaged	Non-pyrogenic blood and dialysate pathway	Batch code	Article number	Date of manufacture	Expiry date	Use only on machines with exact UF control	Consult instructions for use	Max. TMP (physical limitation) 600 mmHg (80 kPa)
DE	Lagertemperatur zwischen 0°C ... 30°C	Gamma-Sterilisation, Blut - und Dialysatseite steril	Nicht zur Wiederverwendung	Vorsicht	Nicht verwenden, wenn die Verpackung beschädigt ist	Blut - und Dialysatseite pyrogenfrei	Chargenbezeichnung	Artikelnummer	Herstellungsdatum	Verwendbar bis	Nur an Maschinen mit genauer UF Kontrolle verwenden	Bitte Gebrauchsanweisung lesen	Max. TMP (physische Begrenzung) 600 mmHg (80 kPa)
BG	Температура на съхранение между 0°C ... 30°C	Гама стерилизация,стерилни пътища за кръв и диализа	Само за еднократна употреба	Внимание	Не използвайте, ако опаковката е повредена	Непирогенни пътища за кръв и диализа	Партиден номер	Артикулен номер	Дата на производство	Срок на годност	Използвайте само на машини с прецизен контрол на ултрафилтрацията (UF)	Консултирайте се с инструкциите за употреба	Макс. TMP (физическо ограничение) 600 mmHg (kPa)
CZ	Skladovací teplota mezi 0 °C ... 30 °C	Sterilizováno gama zářením sterilní vedení krve a dialyzátu	Pouze na jedno použití	Upozornění	Nepoužívat, jestliže je balení poškozeno	nepyrogenní vedení krve a dialyzátu	Číslo šarže / Kód dávky	Katalogové číslo	Datum výroby	Datum vypršení/ Použít do data	Používejte pouze s přístrojem s přesným řízením ultra-filtrace (UF)	Čtěte návod k použití	Max. Transmembránový tlak TMP (fyzikální omezení) 600 mmHg (80 kPa)
DK	Opbevaringstemperatur mellem 0°C ... 30°C	Gammasterilisation, blod- og dialysatpassage, steril	Kun til engangsbrug	Advarsel	Må ikke anvendes, hvis pakningen er brudt	Må ikke anvendes,hvis pakningen er brud Ikke-pyrogen blod- og dialysatpassage	Batchkode	Artikelnummer	Produktionsdato	Udløbsdato	Må kun anvendes på maskiner med en nøjagtig UF kontrol	Se brugsanvisningen	Maks. TMP (fysisk begrænsning) 600 mmHg (80 kPa)
EE	Hoiundamine temperatuurivahemikus 0°C - 30°C	Gamma sterilisatsioon, steriilne vere jadialüsaadi liin	Ainult ühekordseks kasutamiseks.	Ettevaatust!	Ärge kasutage, kui pakend on kahjustatud	Mittepürogeenne vere ja dialüsaadi liin	Partii kood	Artikli number	Tootmiskuupäev	Aegumiskuupäev	Kasutage ainult masinatel, kus on täpne UF kontroll	Lugege kasutusjuhendit	Maks. TMP (füüsikaline piirang) 600 mm Hg (80 kPa)
ES	Temperatura de almacenamiento entre 0°C ... 30°C	Esterilización por gamma, vía estéril dializante y de sangre	De un solo uso	Cuidado	No lo use si el embalaje estuviera dañado	Vía dializante y de sangre sin pirógeno	Código del lote	Número del artículo	Fecha de fabricación	Fecha de caducidad	Utilice el producto solo en máquinas con sistema de control exacto UF.	Consulte las instrucciones de uso	Máx. TMP (limitación física) 600 mmHg (80 kPa)
FI	Säilytyslämpötila välillä 0°C ... 30°C	Gammasterilointi, steriili dialysaattija veritie	Vain kertakäyttöön	Huomio	Älä käytä pakkausta, jos se on vaurioitunut	Ei-pyrogeeninen dialysaatti- ja veritie	Eräkoodi	Tuotenumero	Valmistuspäivä	Voimassaolopäivä	Käytä vain laitteissa, joissa tarkka ultrafiltraatio-valvonta	Katso käyttöohjeet	Maks. TMP (fysikaalinen rajoitus) 600 mmHg (80 kPa)
FR	Température de conservation entre 0°C ... 30°C	Stérilisation par rayonnement gamma, ligne du sang et du dialysat stérile	Usage unique exclusivement	Attention	Ne pas utiliser si l'emballage est endommagé	Ligne du sang et du dialysat non- pyrogène	Code du lot	Numéro article	Date de fabrication	Date d'expiration	Utilisation uniquement sur des machines avec contrôle exact UF	Consulter le mode d'emploi	PTM max. (limite physique) 600 mmHg (80 kPa)
GR	Θερμοκρασία αποθήκευσης μεταξύ 0 °C ...30 °C	Αποστείρωση με ακτινοβολία γάμμα, στείρο αίμα και στείρα διαδρομή διηθήματος	Μόνο μιας χρήσης	Προσοχή	Μην το χρησιμοποιείτε αν έχει υποστεί ζημιά η συσκευασία.	Μη πυρετογόνο αίμα και διαδρομή διηθήματος	Κωδικός παρτίδας	Αριθμός προϊόντος	Ημερομηνία κατασκευής	Ημερομηνία λήξης	Χρήση μόνο σε μηχανήματα με ακριβή έλεγχο UF	Συμβουλευτείτε τις οδηγίες χρήσης	Μέγ. TMP (φυσικός περιορισμός) 600 mmHg (80 kPa)
HR	Temperatura za skladištenje između 0°C ... 30°C	Sterilizacija gama zrakama, sterilan put za krv i dijalizat	Samo za jednokratnu uporabu	Oprez	Ne koristite proizvod ako je pakiranje oštećeno.	Ne-pirogeni put za krv i dijalizat	Batch kod	Broj artikla	Datum proizvodnje	Rok uporabe	Koristiti samo s uređajima s točnom UF kontrolom	Pročitite upute za rukovanje	Maks. transmembranski tlak (fizičko ograničenje) 600 mmHg (80 kPa)
HU	Tárolási hőmérséklet: 0°C és 30°C	Gamma sterilizálás, steril vér és dializátum útvonal	Egyszer használatos	Figyelem!	Ha a csomagolás sérült, ne használja fel	Pirogénmentes vér és dializátum útvonal	Tétel kód	Cikkszám	Gyártási idő	Lejárati dátum	Csak pontos ultrafiltrációs ellenőrzést végző gépeken használható	Lásd a használati útmutatót	Max. TMP (fizikai korlátozás): 600 Hgmm (80 kPa)
IT	Temperatura di stoccaggio tra 0°C ... 30°C	Sterilizzazione con raggi gamma , percorso sangue e dialisato sterile	Monouso	Attenzione	Non usare se la confezione è danneggiata	Percorso sangue e dialisato apirogeno	Codice lotto	Numero articolo	Data di produzione	Data di scadenza	Utilizzare solo su macchine con sistema di controllo dell'ultrafiltrazione	Consultare le istruzioni per l'uso	TMP max (limite fisico) 600 mmHg (80 kPa)
KZ	Сақтау температурасы: 0°C ... 30°C арасы	Гамма стерилдеу	Тек бір рет пайдалануға арналған	Сақ болыңыз	Бумасы зақымдалған жағдайда пайдаланбаңыз	Толық мазмұны пирогендік емес	Топтама коды	Тауар нөмірі	Өндірілген күні	Жарамдылық мерзімі	Нақты УС басқару құралы бар машинада ғана пайдаланыңыз	Пайдалану нұсқауларын қараңыз	Ең көп TMP (физикалық шек) 600 мм сынап бағанасы (80 кПа)
LT	Laikymo temperatūra nuo 0°C iki 30°C	Sterilizuota gama spinduliais, kraujo ir dializato vamzdynas sterilus	Vienkartinio naudojimo	Perspėjimas	Jeigu pakuotė pažeista, nenaudokite.	Nepirogeniškas kraujo ir dializato vamzdynas	Partijos kodas	Gaminio numeris	Pagaminimo data	Galiojimo data	Naudokite tik su įrenginiais su tikslia UF kontrole	Skaitykite naudojimo instrukcijas	Maks. TMS (fizinis apribojimas) 600 mmHg (80 kPa)
LV	Uzglabāšanas temperatūra no 0°C ... 30°C	Gamma sterilizācija, asiņu un dializātasistēma, sterila	Tikai vienreizējai lietošanai	Uzmanību	Nelietot to, ja iepakojums ir bojāts	Apirogēnaasiņu un dializātasistēma	Partijas kods	Preces numurs	Ražošanas datums	Derīguma termiņš	Lietojiet tikai mašīnās ar precīzu UF kontroli	Izlasiet lietošanas instrukcijas	Maks. TMP (fiziskais ierobežojums) 600 mmHg (80 kPa)
NL	Opslagtemperatuur tussen 0°C ... 30°C	Gamma sterilisatie, steriel bloed en dialysaat traject	Enkel voor eenmalig gebruik	Waarschuwing	Niet gebruiken als de verpakking beschadigd is	pyrogeenvrij bloed en dialysaat traject	Batchcode	Artikelnummer	Productiedatum	Vervaldatum	Gebruik alleen bij machines met UF controle	Raadpleeg de gebruiksaanwijzing	Max. TMP (fysieke beperking) 600 mmHg (80 kPa)
NO	Oppbevaringstemperatur mellom 0°C og 30°	Gammasterilisering, steril passasje for blod og dialysevæske	Kun til engangsbruk	Vær forsiktig	Skal ikke brukes dersom pakningen er skadet	Ikke-pyrogen passasje for blod og dialysevæske	Batch/LOT	Artikkelnummer	Produksjonsdato	Utløpsdato	Skal kun brukes på maskiner med nøyaktig ultrafiltrasjonskontroll	Les bruksanvisningen	Maks. fysisk begrensning (TMP) 600 mmHg (80 kPa)
PL	Temperatura przechowywania pomiędzy 0°C ... 30°C	Sterylizacja promieniowaniem gamma, sterylny w odniesieniu do przepływu krwi i dializatu	Do użytku jednorazowego	Przestroga	Nie używać, jeżeli opszkowanie jest uszkodzone	Apirogenny w odniesieniu do przepływu krwi i dializatu	Numer serii	Numer produktu	Data produkcji	Data ważności	Należy stosować jedynie z aparatami posia-dającymi dokładne kontrolery ultrafiltracji	Patrz instrukcja użycia	Maks. ciśnienie przezbłonowe (ograniczenie fizyczne) 600 mmHg (80 kPa)
PT	Temperatura de armazenamento entre 0°C ... 30°C	Esterilização por gama, percurso sangue e dialisado estéril	Somente uso único	Advertência	Não usar se a embalagem estiver danificada	Percurso sangue e dialisado apirógeno	Código de lote	Número de item	Data de fabricação	Prazo de validade	Usar somente em máquina com c ontrole UF exato	Consulte as instruções de uso	Pressão transmembranar máxima (limitação física) de 600 mmHg (80 kPa)
RO	Temperatură de depozitare: 0°C ... 30°C	Sterilizare cu raze gama,traseu sanguin şi pentru dializă steril	De unică folosinţă	Atenţie	A nu se utiliza dacă a mbalajul este deteriorat	Traseu sanguin şi pentru dializă, steril şi nepirogenic	Codul lotului	Număr articol	Data fabricaţiei	Data expirării	Utilizaţi numai pe aparate cu sistem de control UF	Consultaţi instrucţiunile de utilizare	TMP (limitare fizică) max. 600 mmHg (80 kPa)
RU	Температура хранения: от 0°C ... 30°C	Стерилизация гамма-излучением, стерильный маршрут крови и диализата	Только для однократного применен ия	Осторожно!	Если упаковка повреждена, не используйте.	Апирогенный маршрут крови и диализата	Номер партии	Артикул	Дата производства	Срок годности	Использовать только в аппаратах для гемодиализа с точным контролем ультрафильтрации	См. инструкцию по применению	Макс. трансмембранное давление (физическое ограничение) 600 мм рт. ст. (80 кПа)
SE	Lagringstemperatur mellan 0°C ... 30°C	Gamma sterilisering, Blod- och dialysväg, steril	Endast för engångsbruk.	Försiktighet	Använd inte om förpackningen är skadad	Icke-pyrogenisk blod- och dialysväg	Satskod	Artikelnummer	Tillverkningsdatum	Förfallodatum	Använd endast på apparater med exakt UF kontroll	Se bruksanvisningen	Max. TMP (fysisk begränsning) 600 mmHg (80 kPa)
SI	Temperatura shranjevanja med 0°C ... 30°C	Gama sterilizacija, sterilna pot krvi in dializata	Samo za enkratno uporabo	Pozor	Ne uporabljajte, če je embalaža poškodovana	Nepirogena pot krvi in dializata	CelKoda serije	številka izdelka	Datum izdelave	Rok uporabe	Uporabljajte le na napravah z natančno UF kontrolo	Glejte navodila za uporabo	Največji transmembranski tlak (fizična omejitev) 600 mmHg (80 kPa)
SK	Skladovacia teplota medzi 0 °C ... 30 °C	Gama sterilizácia, sterilné vedenie krvi a dialyzátu	Iba na jedno použitie	Upozornenie	Ak je balenie poškodené, nepoužívajte ho.	nepyrogénne vedenie krvi a dialyzátu	Kód dávky	Číslo produktu	Dátum výroby	Dátum spotreby	Používajte iba na strojoch s presným UF ovládaním	Pozri návod na použitie	Max. transmembránový tlak TMP (fyzikálne obmedzenie) 600 mmHg (80 kPa)
SRB	Saklama sıcaklığı 0°C ... 30°C	sterilizacija sa gama zrakama , sterilna putanja za krv i dijalizat	Samo za jednokratnu upotrebu	Mera opreza	Nemojte da koristite ako je pakovanje oštećeno	Ne-pirogena putanja za krv i dijalizat	Batch kod	Broj artikla	Datum proizvodnje	Datum isteka važenja	Koristite samo sa aparatima sa tačnom UF kontrolom	Konsultujte uputstva za upotrebu	TMP (fizičko ograničenje) 600 mmHg (80 kPa)
TR	Saklama sıcaklığı 0°C ... 30°C	Gama sterilizasyon, steril kan ve diyalizat yolu	Tek kullanımlık	Dikkat	Paket hasar görmüşse kullanmayın	Pirojenik olmayan kan ve diyalizat yolu	Parti kodu	Ürün numarası	Üretim tarihi	Son kullanma tarihi	Sadece tam UF kontollü makinelerde kullanın	Kullanım için talimatlara başvurun	Maks. TMP (fiziksel sınır) 600 mmHg (80 kPa)
US	Temperature limit: Store between 0° C and 30° C (32 ° F and 86 ° F)	Sterilized by irradiation, sterile fluid pathway	Do not re-use	Caution	Do not use if packaging is damaged	Non-pyrogenic fluid pathway	Batch code	Catalog number	Date of manufacture	Use by date	Use only on machines with exact UF control	Consult instructions for use	max. TMP (physical limitation) 600 mmHg (80kPa)

Diacap® Pro

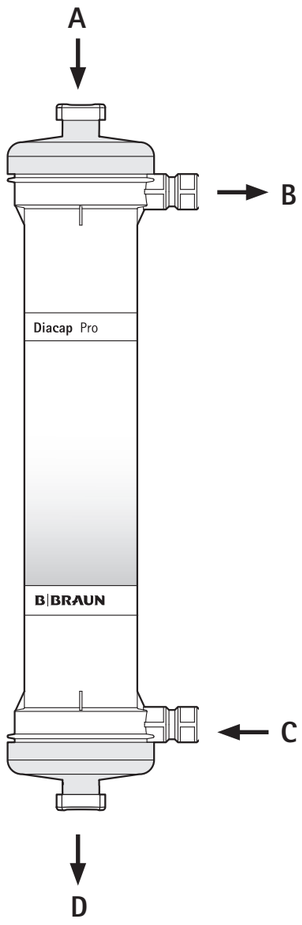

	A	B	C	D
GB	Blood inflow	Outflow dialysate fluid	Inflow dialysate fluid	Blood outflow
DE	Bluteinlauf	Auslauf Dialysatflüssigkeit	Einlauf Dialysierflüssigkeit	Blutauslauf
BG	Кръв вливане	Изтичане диализна течност	Вливане диализна течност	Кръв изтичане
CZ	Vstup krve	Výstup dialyzátu	Vstup dialyzátu	Výstup krve
DK	Blodtilstrømning	udstrømning af dialysevæske	Indgående dialysevæske	Blodudstrømning
EE	Vere sissevoolu	Dialüsaadivedeliku väljavool	Dialüsaadivedeliku sissevool	Vere väljavool
ES	Entrada de la sangre	Salida del fluido dializante	Entrada del fluido dializante	Salida de la sangre
FI	Veren sisäänvirtaus	Dialyysiliuoksen ulosvirtaus	Dialyysiliuoksen sisäänvirtaus	Veren ulosvirtaus
FR	Entrée sang	Sortie dialysat	Entrée dialysat	Sortie sang
GR	Εισροή αίματος	Εκροή υγρού διηθήματος	Εισροή υγρού διηθήματος	Εκροή αίματος
HR	Dotok Krvi	Odljev dijalizat otopine	Dotok dijalizat otopine	Odljev krvi
HU	Véroldali bemenet	Dializáló folyadék kimenet	Dializáló folyadék bemenet	Vér kimenet
IT	Ingresso sangue	Uscita dialisato	Ingresso dialisato	Uscita sangue
KZ	Қан кірісі	Шығыс диализат сұйықтығы	Кіріс диализат сұйықтығы	Қан шығысы
LT	Kraujo įtekėjimo anga	Dializato skysčio ištekėjimo anga	Dializato skysčio įtekėjimo anga	Kraujo ištekėjimo anga
LV	Asins ieplūde	Dializātā šķidruma izplūde	Dializāta šķidruma ieplūde	Asins izplūde
NL	Bloed instroming	Bloed uitstroming dialysaat	Instroming dialysaat	Uitstroming bloed
NO	Innstrømming av blod	Utstrømming av dialysevæske	Innstrømming av dialysevæske	Utstrømming av blod
PL	Napływ krwi	Odpływ dializatu	Napływ dializatu	Odpływ krwi
PT	Entrada de sangue	Saída do fluido solução de diálise	Entrada do fluído solução de diálise	Saída de sangue
RO	Intrare sânge	Ieşire soluţie de dializă	Intrare soluţie de dializă	Ieşire sânge
RU	Приток крови	Отток диализата	Приток диализата	Отток крови
SE	Blod inflöde	Utflöde dialysatvätska	Inflöde dialysatvätska	Blod utflöde
SI	Dotok krvi	Odtok dializatne tekočine	Dotok dializatne tekočine	Odtok krvi
SK	Prítok krvi	Odtok dialyzačnej kvapaliny	Prítok dialyzačnej kvapaliny	Odtok krvi
SRB	Dotok krvi	Odliv dijalizat rastvora	Dotok dijalizat rastvora.	Odliv krvi
TR	Kan girişi	Çıkış diyalizat sıvısı	Giriş diyalizat sıvısı	Kan çıkışı
US	Blood inflow	Outflow dialysate fluid	Inflow dialysate fluid	Blood outflow

Diacap® Pro Dialyzer

Instructions for use – please read carefully

CE 0123 US

GENERAL INFORMATION

Indication / Intended Use: The Diacap Pro Dialyzer is designed for single use in acute and chronic hemodialysis.

Contraindications: There are no specific contraindications to the use of the Diacap Pro dialyzers. Generally, contraindications for hemodialysis are applicable. Patients with known hypersensitivity to any of the materials used (please see technical data) must not be treated with this product. The dialyzer should only be used as directed by a physician.

Side effects: Hypersensitivity reactions may occur in rare cases during dialysis. If hypersensitivity reactions are severe, the dialysis must be discontinued and appropriate medical treatment should be initiated. The blood from the extracorporeal system must not be returned to the patient. Diacap Pro dialyzers are gamma sterilized in an oxygen-free environment and do not contain any sterilization residuals. For patients with known ethylene oxide hypersensitivity, all components of the extracorporeal system should be free of ethylene oxide.

Caution: Federal (USA) law restricts this device to sale by or on the order of a physician. If a blood leak occurs during dialysis, the facility´s established protocol should be followed by the health care provider. To ensure that the expected therapy is provided, the user is advised to monitor the patient´s chemistry values at regular intervals by means of quantitative measurements and analysis. Monitoring should, at a minimum, include the clinical parameters: urea, hematocrit and serum albumin.

Anticoagulation: The indication and dosage of anticoagulants is the responsibility of the physician. Insufficient anticoagulation can lead to thrombus formation in the capillaries of the dialyzer which reduces its performance.

Dialyzer reuse: Diacap Pro dialyzers are NOT for reuse

WARNINGS

1. The selection of a suitable Diacap Pro dialyzer configuration shall be performed by the physician based on patient characteristics (cardiovascular status, therapy tolerance, body size, weight, etc.) and clinical requirements.
2. Please follow the instructions for use of the dialysis machine manufacturer when using the Diacap Pro dialyzers.
3. Keep dialyzer stored in an undamaged package to ensure sterility. The use by date only applies when the Diacap Pro dialyzers are correctly stored in undamaged packaging.
4. The blood inflow and outflow connectors must remain closed prior to connecting the dialyzer to blood line connectors. Preparation of the extracorporeal system and the Diacap Pro dialyzer must take place under aseptic conditions.
5. Due to the high hydraulic permeability, it is possible for dialysate to enter the blood circulation at low ultrafiltration rates. For this reason, the dialysate must meet the current water quality standards for dialysis. The Diacap Pro dialyzers must be used exclusively with dialysis machine exact UF control and blood leak detector. It is essential to comply with the machine manufacturer's safety instructions.
6. Diacap Pro dialyzers are single use only. Re-use of single-use devices creates a potential risk to the patient or user. It may lead to contamination and/or impairment of functional capability. Contamination and/or limited functionality of the device may lead to injury, illness or death of the patient.

PREPARATION OF DIACAP PRO DIALYZERS

First, the Diacap Pro dialyzer is positioned vertically in the holder provided. Carefully remove end caps and place them on the dialysate (Hansen) connectors of the dialyzer. Using aseptic technique, connect the arterial and venous blood lines to the respective ends of the dialyzer. The arterial bloodline connectors should be at the bottom position during this stage. If using Streamline® or other bloodlines, consider following priming instructions as indicated in the instructions for use. One of the two following procedures can be used for priming:

1. Priming with recirculation: Attach saline infusion line if not already attached. Connect to a sterile 0.9% saline solution and allow saline to purge air from arterial bloodline by gravity. Clamp arterial bloodline once air is removed. Start blood pump 100 ml/min. (higher blood pump speed can be unfavorable for air removal). Fill remainder of the dialyzer and venous bloodline and purge air from the complete extracorporeal system. Gently tap dialyzer to facilitate air removal. Once the complete extracorporeal system has been filled, stop the blood pump and connect arterial and venous blood line with recirculation adapter using aseptic technique. Recirculate the extracorporeal circuit at a blood flow of 200 – 300 ml/min until all air is purged. Please ensure complete deaeration of the blood compartment.
2. "Single Path" Priming without recirculation: Attach saline infusion line if not already attached. Connect to a sterile 0.9% saline solution and allow saline to purge air from arterial bloodline by gravity. Clamp arterial bloodline once air is removed. Start blood pump 100 ml/min. (higher blood pump speed can be unfavorable for air removal). Prime the dialyzer and complete extracorporeal system. Gently tap the dialyzer to facilitate air removal. Discard not less than 300 ml of priming solution. Please ensure complete deaeration of the blood compartment.

Rinse the dialysate compartment according to the instructions provided by the dialysis machine manufacturer. In order to maximize the efficiency of the dialyzer, the dialysate flow must be countercurrent to the blood flow (arterial blood line connectors bottom up). The dialyzer is now ready for connecting to the patient.

INITIATION OF TREATMENT

Consider discarding any recirculated volume and/or follow your institution protocol. Aseptically connect the arterial and venous blood line to the vascular access of the patient. Remove all obstructive clamps and fill the extracorporeal system with a blood pump with approximately 100ml/min. Increase blood pump to the prescribed value and start the ultrafiltration rate as per prescription. Please follow the institution protocol and instructions provided by the dialysis machine manufacturer.

DURING THE TREATMENT

In the event of a dialyzer blood leak, please follow the institution protocol and instructions provided by the dialysis machine manufacturer. Make sure: all connections are checked at regular intervals throughout the treatment. In the event that air enters the extracorporeal system please follow the institution protocol and instructions provided by the dialysis machine manufacturer. In case the air can not be removed safely by those instructions, discontinue the dialysis treatment without returning the blood to the patient.

TERMINATION OF THE TREATMENT

Reinfusion of the patient's blood is performed according to instructions provided by the dialysis machine manufacturer. The Diacap Pro dialyzers, including all single use materials of the extracorporeal system, have to be discarded immediately after use. Disposal must comply with the local state regulations.

Technical data		Diacap	Pro 13H				Pro 16H				Pro 19H				
			720DH13				720DH16				720DH19				article number
clearance		**Blood flow(Q_B)**	**200**	**300**	**400**	**500**	**200**	**300**	**400**	**500**	**200**	**300**	**400**	**500**	ml/min
dialysate flow	= 500 ml/min	Urea	194	263	303	322	196	270	322	340	197	280	332	353	ml/min
ultrafiltration (Q_F)	= 0 ml/min	Creatinine	185	236	269	282	189	248	284	300	194	260	305	314	ml/min
		Phosphate	178	220	249	271	184	230	261	285	186	242	278	298	ml/min
		Vitamin B_{12}	133	151	167	176	143	166	183	190	150	180	202	207	ml/min
		Inulin	86	92	101	108	96	106	116	121	102	117	128	131	ml/min
		Cytochrome C	65	73	75	77	72	81	86	90	80	90	95	102	ml/min
S.C. («Sieving Coefficient»)		Inulin	**1.0**												
Q_B = 300 ml/min		$ß_2$-Microglobulin	**0.7**												
Q_F = 60 ml/min		Albumin	**< 0.001**												
ultrafiltration coefficient		Q_B = 300 ml/min	70				85				97				ml/h/mmHg
surface area			1.3				1.6				1.9				m^2
volume of blood compartment			82				100				120				ml
max. transmembrane pressure (physical limitation)			600				600				600				mmHg
recommended blood flow rate			200 - 500				200 - 500				200 - 500				ml/min
max. dialysate flow			800				800				800				ml/min
pressure drop dialysate side (Q_D = 500 ml/min)			9				8				6				mmHg
pressure drop blood side (Q_B = 300 ml/min)			101				82				72				mmHg

The performance data given above should be regarded as approximate. Under clinical conditions, different values may be obtained due to patient condition such as hematocrit and serum protein. A clinical study was performed with Diacap Pro dialyzers including 12 patients.
The in vivo ultrafiltration coefficients were determined using a standard dialysis machine:
Clinical data (ml/h/mmHg): Diacap Pro 1.3m^2 = 54, Diacap Pro 1.6m^2 = 67, Diacap Pro 1.9m^2 = 70 (Q_B 350 ml/min - Q_D 500 ml/min)

recommended blood and dialysate fluid connection according to ISO 8637;

measuring conditions and physical data according to ISO 8637

ultrafiltration coefficient according to ISO 8637: bovine blood, Hct. 32%, protein 60 g/l, T= 37 °C

membrane material: α polysulfone Pro

housing material: polycarbonate

potting material: polyurethane

sterilization: gamma (oxygen-free)

o-ring: silicon

US distributor:
B. Braun Medical Inc.
Bethlehem, PA 18018-3524
USA, Tel +1-800-621-0445

GLOSSARY OF LABELLING SYMBOLS

Symbol	Title	Reference number	Explanatory text or meaning
	Date of Manufacture	5.1.3	Indicates the date when the medical device was manufactured.
	Use by date	5.1.4	Indicates the date after which the medical device is not to be used.
LOT	Batch Code	5.1.5	Indicates the manufacturer´s batch code so that the batch or lot can be identified.
REF	Catalog number	5.1.6	Indicates the manufacturer´s catalog number so that the medical device can be identified.
	Do not use if package is damaged	5.2.8	Indicates a medical device that should not be used if the package has been damaged or opened.
STERILE R	Sterilized using irradiation	5.2.4	Indicates a medical device that has been sterilized using irradiation.
	Sterile fluid path	5.2.9	Indicates the presence of a sterile fluid path within the medical device in cases when other parts of the medical device, including the exterior, might not be supplied sterile.
0°C 30°C	Temperature limit	5.3.7	Indicates the temperature limits to which the medical device can be safely exposed.
	Do not re-use	5.4.2	Indicates a medical device that is intended for one use, or for use on a single patient during a single procedure.
	Consult instructions for use	5.4.3	Indicates the need for the user to consult the instructions for use.
	Non-pyrogenic Fluid path	5.6.2 5.6.3	Indicates the presence of a fluid path. Indicates a medical device that is non-pyrogenic
	Caution	5.4.4	Indicates the need for the user to consult the instructions for use for important cautionary information such as warnings and precautions that cannot be presented on the medical device itself.

According to ISO 15223-1: Medical devices - Symbols to be used with medical device labels, labeling and information to be supplied - Part 1 General requirements

© B. Braun Avitum AG

KDP2020-05
Revision: 06/2017

Document No.: P-8668 - Version: 1.0 - Document ID: DWG-MD-2025256 Date/Time Printed/Viewed: 2019-03-12 18:23 (CET)